Optiwave
DESIGN SOFTWARE

EPIC Online Technology Meeting on
Co-packaged Optics

Cem Bonfil

Product Manager - Optoelectronics

7 Capella Court
Nepean, ON, Canada
K2E 7X1

+1 (613) 224-4700
www.optiwave.com

Introduction - I

- Optiwave established in 1994
- Located in Ottawa, Ontario, Canada
- Optiwave develops innovative software tools that offer design, simulation, and optimization capabilities for components, links, systems and networks
- Optiwave's software offers users a distinct competitive advantage through
  - vastly shortening product time introduction to the market
  - dramatically improving product quality
  - enhancing productivity and cost-effectiveness

Introduction - II

- Optiwave's software has been licensed to more than 1000 industry-leading corporations, universities, research and governmental institutions in over than 75 countries worldwide.
- Customers sample and their field of operation :
  - Photonic component and module suppliers: VIAVI Solution & Lumentum (JDS Uniphase), Oclaro, Corning, 3M, LG, Intel and Oki Electric
  - Optical telecommunication equipment providers: Nokia (Alcatel/Lucent), Huawei, Mitsubishi, NEC, IPG Photonics and Ciena
  - Telecommunication Service providers: NTT, AT&T and Bell Canada
  - National defense contractors: Lockheed Martin, Raytheon, Boeing, BaeSystems and Thales
  - Non-profit organizations: Sandia National Laboratories, Battelle, National Research Council of Canada, and Communications Research Centre
  - Universities: Harvard, MIT, Stanford, Ottawa, Toronto, McGill, Nanyang, Shanghai and Tokyo University

Optiwave DESIGN SOFTWARE

Product Line

System-Level

OptiSystem
Optical Communication System and Amplifier Design Suite

OptiSPICE
The First Opto-Electronic Circuit Design Software

Component-Level

OptiBPM
Waveguide Optics Design Software

OptiFDTD
Finite-Difference Time-Domain Simulation Design

OptiFiber
Optical Fiber Design Software

OptiGrating
Integrated and Fiber Optical Gratings Design Software

Product Line – New Software

Instrumentation-Level

OptiInstrument

Instruments Communication and Control Tool

- Allow remote communication & control of instruments
- Setup parameters of equipment
- Automate testing and characterization
- View generated signals
- Extract & save the data of generated signals for post processing
- Integrate instruments with photonics and systems simulation tools

Simulation Capabilities

Opto-electronic Circuits (Ring resonators, Laser drivers, Optical interconnects)

Optical Networks (OTDM, SONET/SDH rings, CWDM, DWDM, PON, OCDMA)

Optical Amplifiers & Lasers (EDFA, SOA, Raman, Hybrid, GFF optimization, Parametric, Fiber Lasers)

Modulation formats (RZ, NRZ, CSRZ, DB, DPSK, QPSK, DP-QPSK, PM-QPSK, QAM)

Optical Wireless Communication (LiFi, Satellite, FSO, VLC, 5G backbone)

Sensors (FBG sensor, Phi-OTDR, OTDR)

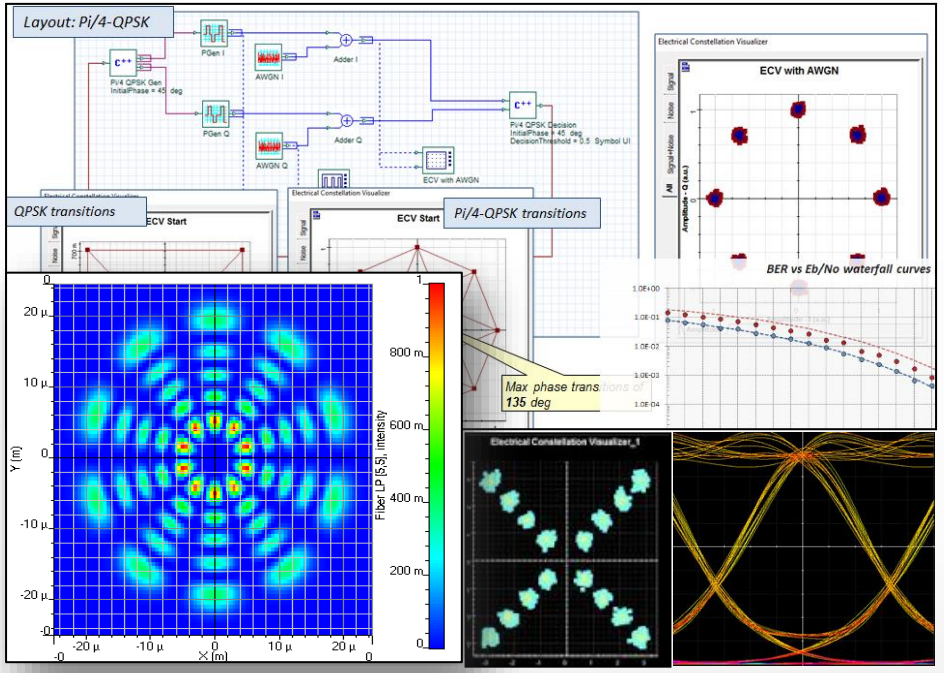

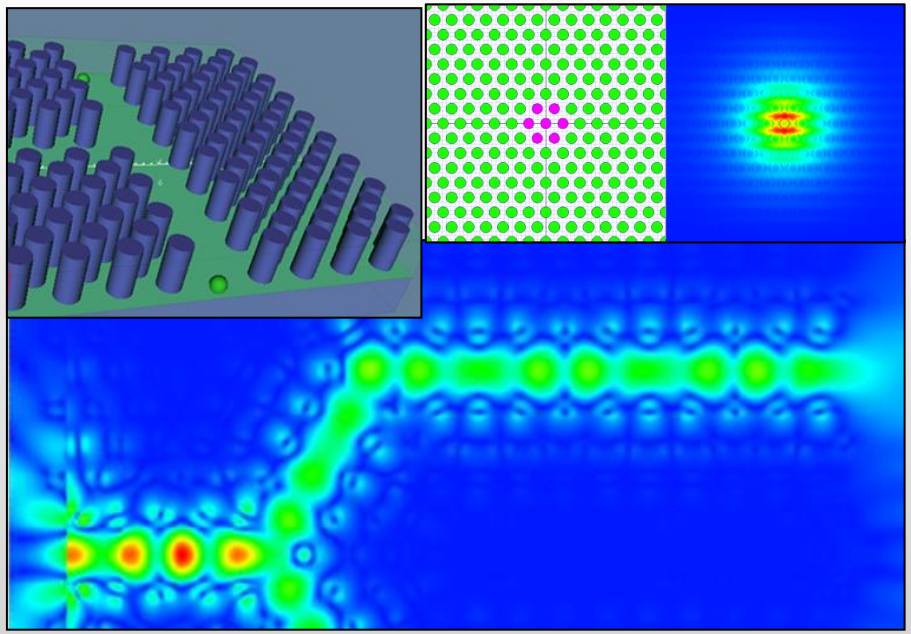

Finite-Difference Time-Domain (Dielectric and metallic gratings, photonic crystals, nanoparticles)

Beam Propagation Method (couplers, splitters, modulators, multiplexers, AWGs)

Optical Gratings (Filters, Fiber Bragg reflectors, Gain flattening elements, dispersion compensators)

Optical Fiber (Fiber characterization, visualizing multimode interference patterns, fiber sensors)

Mode Solving (Polarization splitter with holey fiber, polarization independent waveguide)

OptiSPICE Overview I

1. OptiSPICE Standalone
   - Schematic editor
   - SPICE Simulation engine
   - Library of electrical and optical models
   - Parameter extractors (Laser, fiber, modulator, filter)
   - Connection with OptiSystem, OptiBPM, OptiFDTD, OptiGrating
   - Example library & documentation

2. OptiSPICE Plugin
   - Schematic editor (3rd party)
   - Mask editor (3rd party)
   - SPICE simulation engine (3rd party)
   - Library of electrical models (3rd party)
   - Library of optical models (Optiwave)
   - Connection with OptiBPM, OptiFDTD, OptiMode, OptiGrating
   - Example library & documentation

OptiSPICE Overview II

- A fully integrated opto-electronics circuit simulator based on modified nodal analysis (MNA)
- Self consistent solution with Newton Raphson iterations
- Set of linear (R,L,C etc..) and nonlinear (BJT, MOSFET etc..) electrical models
- Multi-mode, multi-channel, bidirectional linear (splitter, joiner etc...) and non linear optical models (laser, optical fiber etc..)
- Time and frequency domain solutions

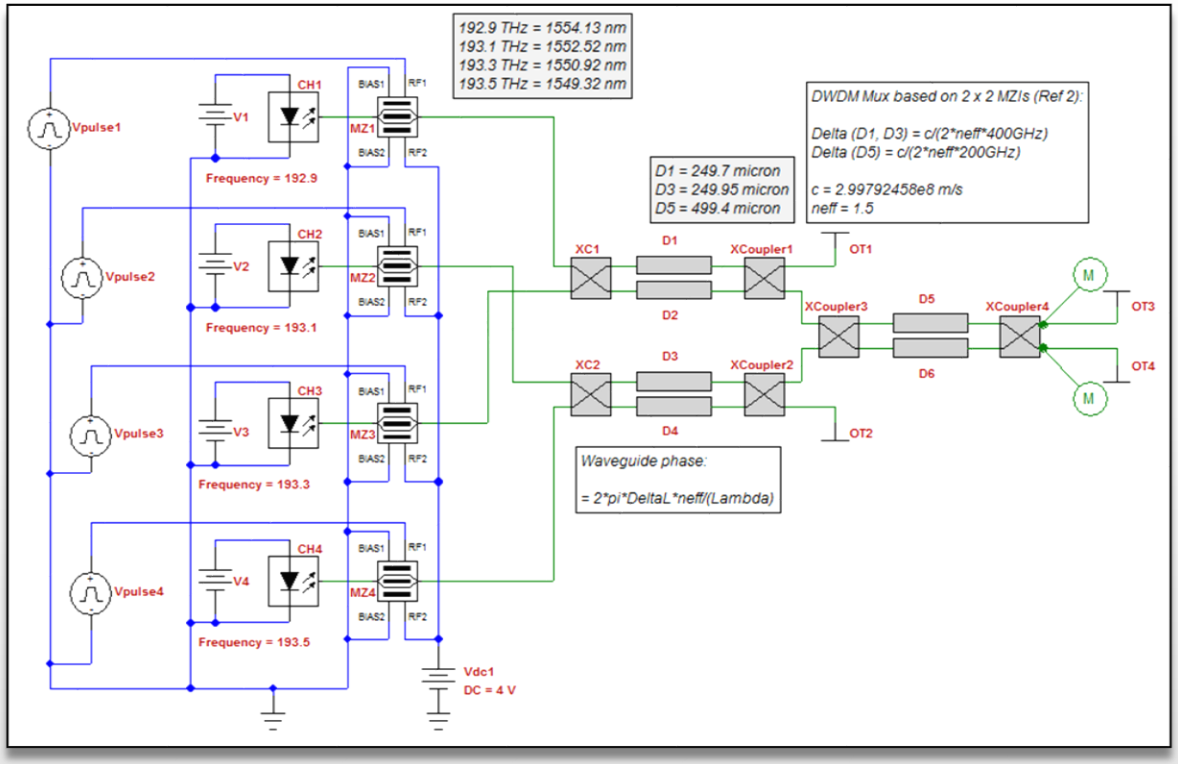

OptiSPICE Applications

- System and chip level multi domain, optical, electrical and thermal, circuit simulations
  - Microwave photonics
  - Optoelectronic sensors
  - Telecommunication circuits and systems

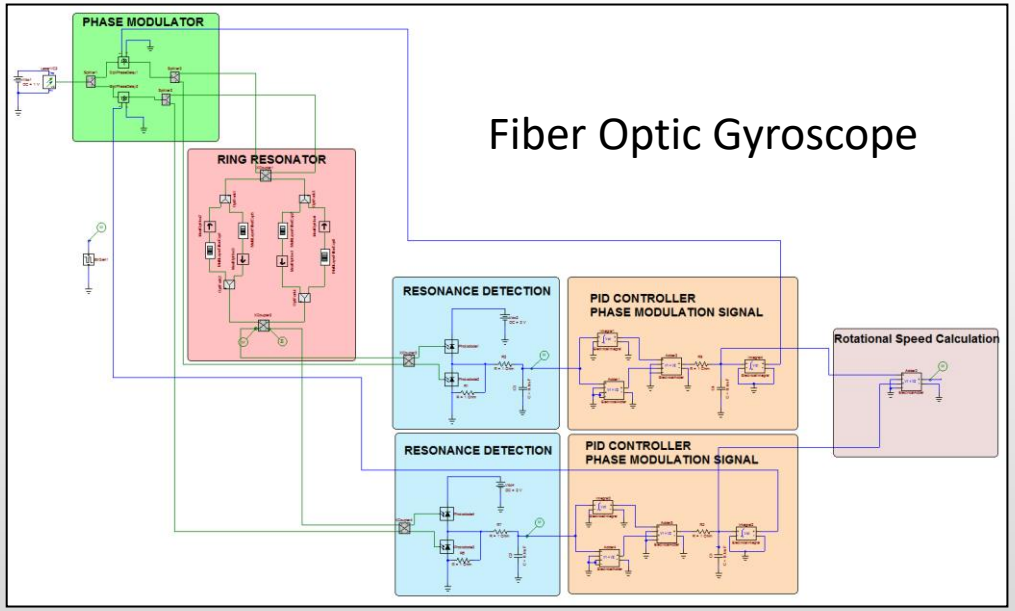

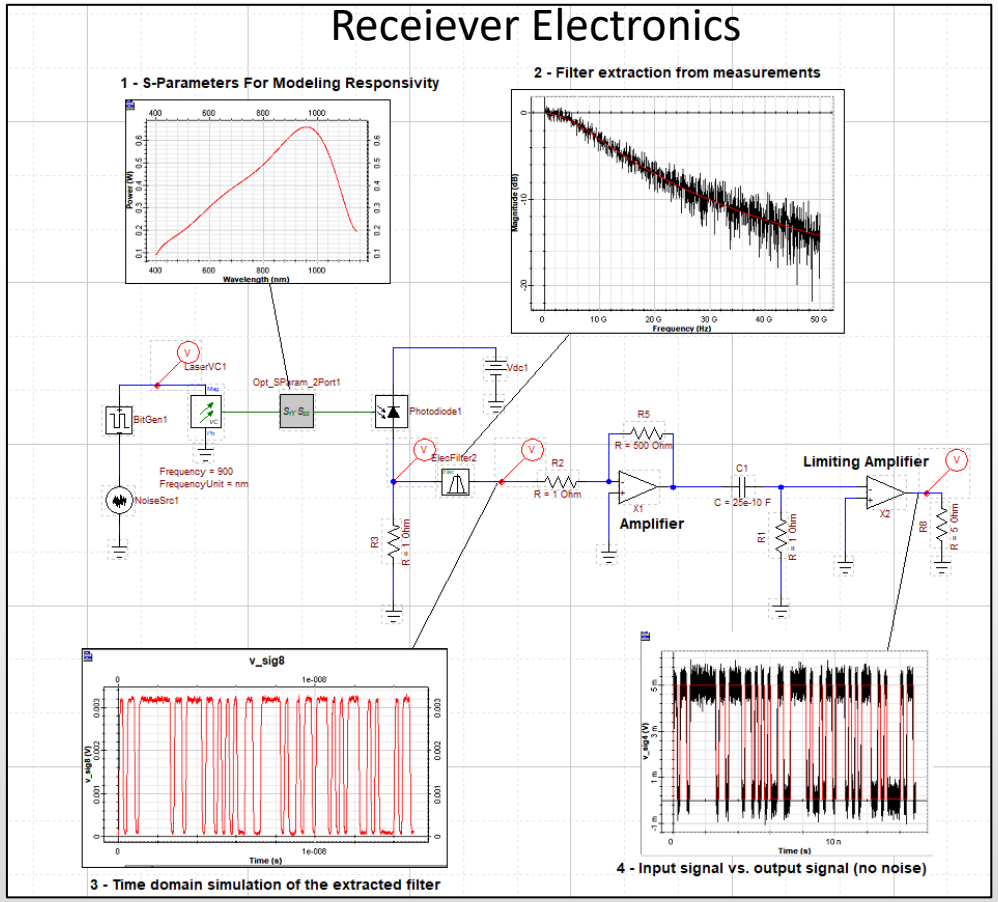

OptiSPICE Plugin

- Closing the gap between optical and electrical EDA tools
  - Native optical model library addon for SPICE engines
  - Support for PIC design flow with EDA tools
  - Simultaneous simulation of optics and electronics
  - PIC simulation from mask
  - Rapid prototyping from schematic

Compact Models

- **Built-in device library**: Laser, photodiode, wavguide, phase shifter, splitter, joiner, xcoupler, ring resonator, gain/loss, s-parameter, ideal bandpass/bandstop filter
- **Passive and active model building** of photonic components using,
  - Simulation: OptiBPM, OptiFDTD, OptiMODE, OptiGrating
  - Experimental Results: Filter Characteristics, IV Curves, Responsivity, effective index (as a function of voltage), S-Parameters
- **Support of photonic PDK's from fabs**

OptiSPICE Tanner Plugin Design Flow

L-Edit

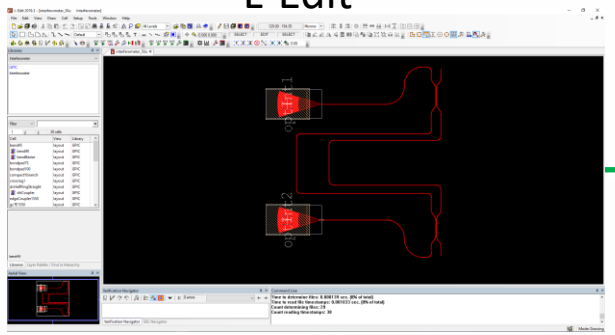

Create/Edit Mask

Extract Netlist

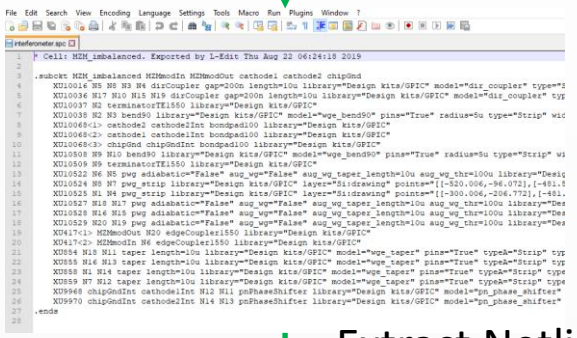

S-Edit

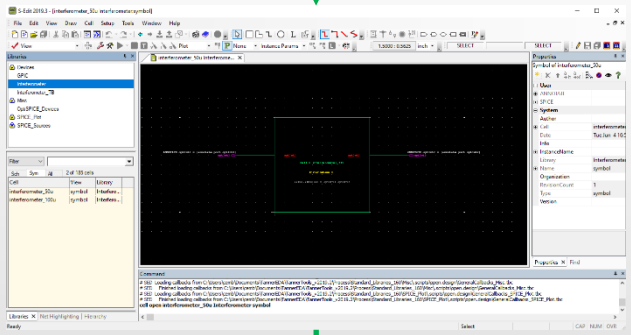

Build/Update Subcircuit

S-Edit/OptiSPICE

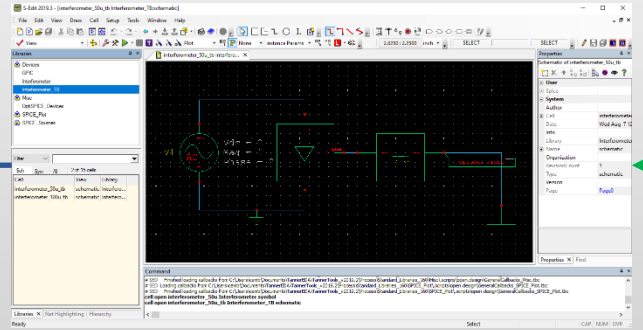

Build/Update Testbench

T-Spice/OptiSPICE

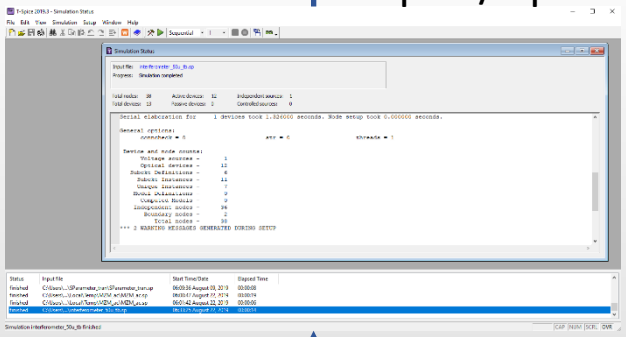

Run Simulation

Waveform Viewer

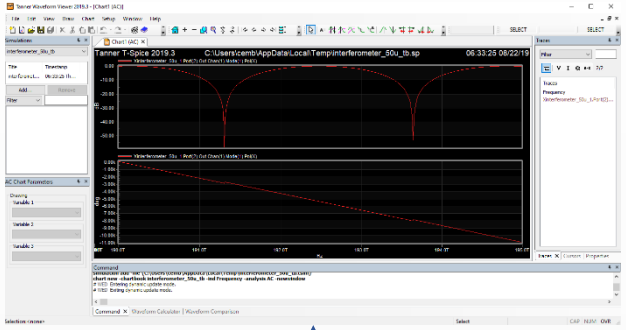

- PIC Simulation from Mask
- PIC Simulation from Mask & Rapid Prototyping

Thank You

cem.bonfil@optiwave.com

OptiInstrument Features

- User friendly GUI
- Execute single or sequence of SCPI commands
- Load XML files and all other file formats into GUI panels
- Drag and drop commands with flexible sequence ordering
- Generate Python script for sequence of commands
- Built in signal viewer and csv file analysis page
- Built in full Python script editor
- Remote operation and control of instruments

OptiSystem Applications

- Optical Wireless Communication: LiFi, Satellite, FSO, VLC, 5G backbone
- Microwave Photonics
  - Large component library (lasers, modulators, filters, detectors, amplifiers, signal processing, etc….
  - Large library of visualizers for optical, electrical and binary signals
- LIDAR system: laser pulse time of flight range measurement, phase-shift range measurement, Frequency Modulation Continuous Wave (FMCW)
- Sensor Systems: FBG, Phi-OTDR, Gyroscopes, OTDR
- Digital signal processing: DSP
- Advanced coherent modulation systems: mQAM, mPAM, mPSK, etc…